ORDER NO. SD81051899C2

Service Manual

FM/MW/LW Stereo Tuner

ST-S2L

[EK], [EF], [EB]

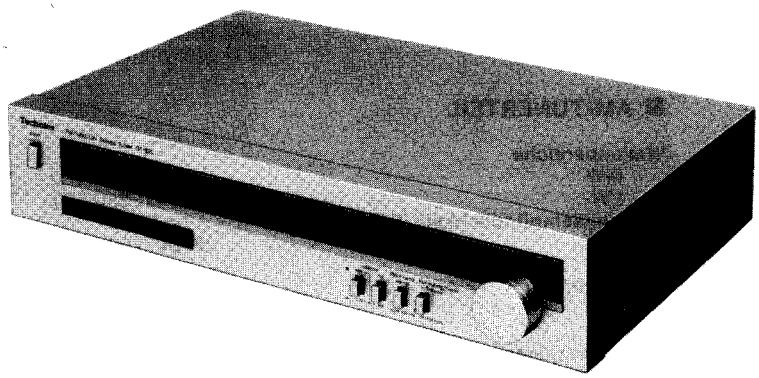

Areas

* [EK] is available in United Kingdom.
* [EF] is available in France.
* [EB] is available in Belgium.

■ CONTENTS

	Page
SPECIFICATIONS	1
TECHNISCHE DATEN	2
CARACTERISTIQUES	2
LOCATION OF CONTROLS	3
DISASSEMBLY INSTRUCTIONS	4
DIAL CORD INSTALLATION GUIDE	4
MEASUREMENTS AND ADJUSTMENTS (English)	4, 5
MESSUNGEN UND JUSTIERUNGEN (Deutsch)	5, 6
MESURAGES ET RÉGLAGES (Français)	7, 8
BLOCK DIAGRAM	9
REPLACEMENT PARTS LIST (Electrical Parts)	10, 16
CIRCUIT BOARD AND WIRING CONNECTION DIAGRAM	11, 12
SCHEMATIC DIAGRAM	13 – 15
REPLACEMENT PARTS LIST (Cabinet & Chassis Parts)	16
EXPLODED VIEW	17, 18

English

Specifications

(Specifications are subject to change without notice for further improvement.)

(DIN 45 500)

■ FM TUNER SECTION

Frequency range	88~108 MHz
Sensitivity	2.0 μV (IHF, usable)
S/N 30 dB	2.0 μV (300Ω), 1.0 μV (75Ω)
S/N 26 dB	1.8 μV (300Ω), 0.9 μV (75Ω)
S/N 20 dB	1.6 μV (300Ω), 0.8 μV (75Ω)
IHF 46 dB stereo quieting sensitivity	25 μV/75Ω
Total harmonic distortion	
MONO	0.15%
STEREO	0.25%
S/N	
MONO	70 dB (78 dB, IHF)
STEREO	65 dB (70 dB, IHF)
Frequency response	20 Hz~15 kHz, +0.5 dB~ −1.5 dB
Alternate channel selectivity	
normal (±400 kHz)	60 dB
super narrow (±200 kHz)	20 dB
Capture ratio	1.0 dB
Image rejection at 98 MHz	55 dB
IF rejection at 98 MHz	70 dB
Spurious response rejection at 98 MHz	80 dB
AM suppression	55 dB
Stereo separation	
1 kHz	40 dB
10 kHz	30 dB
Carrier leak	
19 kHz	−30 dB (−35 dB, IHF)
38 kHz	−45 dB (−50 dB, IHF)
Channel balance (250 Hz~6,300 Hz)	±1.5 dB
Limiting point	1.2 μV
Bandwidth	
IF amplifier	180 kHz
FM demodulator	1000 kHz
Antenna terminals	300Ω (balanced) 75Ω (unbalanced)

■ AM TUNER SECTION

Frequency range	
MW	525~1605 kHz
LW	145~350 kHz
Sensitivity (S/N 20 dB)	
MW	30 μV, 250 μV/m
LW	30μV
Selectivity (± 10 kHz)	
MW	27 dB (1000 kHz)
LW	35 dB (250 kHz)
Image rejection	
MW	50 dB (1000 kHz)
LW	40 dB (250 kHz)
IF rejection	
MW	40 dB (1000 kHz)
LW	40 dB (250 kHz)

■ GENERAL

Output voltage	0.3V, (0.6V, IHF)
Power consumption	7W
Power supply	AC 50 Hz/60 Hz, 110V/120V/220V/240V
Dimensions (W×H×D)	430 × 86 × 289 mm (16-15/16" × 3-3/8" × 11-3/8")
Weight	3.0 kg (6.6 lb.)

Technics

Matsushita Electric Trading Co., Ltd.
P.O. Box 288, Central Osaka Japan

Deutsch

TECHNISCHE DATEN (Spezifikationen können infolge von Verbesserungen ohne Ankündigung geändert werden.)

(DIN 45 500)

■ UKW-TUNERTEIL

Wellenbereich	88~108 MHz
Eingangsempfindlichkeit	2,0 μV (nutzbar nach IHF)
S/R 30 dB	2,0 μV (300 Ω), 1,0 μV (75 Ω)
S/R 26 dB	1,8 μV (300 Ω), 0,9 μV (75 Ω)
S/R 20 dB	1,6 μV (300 Ω), 0,8 μV (75 Ω)
Stereoumschaltschwelle bei 46 dB nach IHF	25 μV/75 Ω
Gesamtklirrfaktor	
Mono	0,15%
Stereo	0,25%
Geräuschabstand	
Mono	70 dB (78 dB nach IHF)
Stereo	65 dB (70 dB nach IHF)
Frequenzgang	20 Hz~15 kHz (+0,5 dB~ −1,5 dB)
Trennschärfe bei Störsender	
normal (±400 kHz)	60 dB
super narrow (±200 kHz)	20 dB
Einfangverhältnis	1,0 dB
Spiegelfrequenz-Dämpfung bei 98 MHz	55 dB
ZF-Dämpfung bei 98 MHz	70 dB
Ansprechdämpfung auf Nebenfrequenzen bei 98 MHz	80 dB
AM-Unterdrückung	55 dB
Übersprechdämpfung	
1 kHz	40 dB
10 kHz	30 dB
Trägerrest	
19 kHz	−30 dB (−35 dB nach IHF)
38 kHz	−45 dB (−50 dB nach IHF)
Kanalabweichung (250 Hz ~ 6300 Hz)	±1,5 dB
Begrenzereinsatz	1,2 μV
Bandbreite	
ZF-Verstärker	180 kHz
UKW-Demodulator	1000 kHz
Antennenanschluß	300 Ω (symmetrisch) 75 Ω (unsymmetrisch)

■ AM-TUNERTEIL

Wellenbereiche	
MW	525~1605 kHz
LW	145~350 kHz
Eingangsempfindlichkeit (S/R 20 dB)	
MW	30 μV, 250 μV/m
LW	30 μV
Trennschärfe (±10 kHz)	
MW	27 dB (1000 kHz)
LW	35 dB (250 kHz)
Spiegelfrequenz-Dämpfung	
MW	50 dB (1000 kHz)
LW	40 dB (250 kHz)
ZF-Dämpfung	
MW	40 dB (1000 kHz)
LW	40 dB (250 kHz)

■ ALLGEMEINE DATEN

Ausgangsspannung	0,3 V, (0,6V, IHF)
Leistungsaufnahme	7W
Netzspannung	Wechselstrom 50 Hz/60 Hz, 110V/120V/220V/240V
Abmessungen (B×H×T)	430 × 86 × 289 mm
Gewicht	3,0 kg

Français

CARACTERISTIQUES (Sujet à changement sans préaris.)

(DIN 45 500)

■ SECTION SYNTONISATEUR FM

Gamme de fréquence	88~108 MHz
Sensibilité	2,0 μV (IHF utilisable)
S/B 30 dB	2,0 μV (300Ω), 1,0 μV (75Ω)
S/B 26 dB	1,8 μV (300Ω), 0,9 μV (75Ω)
S/B 20 dB	1,6 μV (300Ω), 0,8 μV (75Ω)
Sensibilité stéréo au seuil de 46 dB, IHF	25 μV/75Ω
Distorsion harmonique totale	
MONO	0,15%
STEREO	0,25%
Signal/Bruit	
MONO	70 dB (78 dB, IHF)
STEREO	65 dB (70 dB, IHF)
Réponse de fréquence	20 Hz~15 kHz, +0,5 dB~ −1,5 dB
Sélectivité alternée par canal	
normal (±400 kHz)	60 dB
super narrow (±200 kHz)	20 dB
Taux de capture	1,0 dB
Rejection d'image à 98 MHz	55 dB
Rejection FI à 98 MHz	70 dB
Rejection de réponse parasite à 98 MHz	80 dB
Suppression AM	55 dB
Séparation stéréophonique	
1 kHz	40 dB
10 kHz	30 dB
Fuite de porteuse	
19 kHz	−30 dB (−35 dB, IHF)
38 kHz	−45 dB (−50 dB, IHF)
Equilibrage de canaux (250 Hz~6,300 Hz)	±1,5 dB
Point de limite	1,2 μV
Largeur de bande	
Amplificateur FI	180 kHz
Démodulateur FM	1000 kHz
Bornes d'antenne	300Ω (symétrique) 75Ω (asymétrique)

■ SECTION SYNTONISATEUR AM

Gamme de fréquence	
PO (MW)	525~1605 kHz
GO (LW)	145~350 kHz
Sensibilité (S/B 20 dB)	
PO (MW)	30 μV, 250 μV/m
GO (LW)	30 μV
Sélectivité (±10 kHz)	
PO (MW)	27 dB (1000 kHz)
GO (LW)	35 dB (250 kHz)
Réjection d'image	
PO (MW)	50 dB (1000 kHz)
GO (LW)	40 dB (250 kHz)
Réjection FI	
PO (MW)	40 dB (1000 kHz)
GO (LW)	40 dB (250 kHz)

■ DIVERS

Tension de sortie	0,3 V, (0,6V, IHF)
Consommation	7W
Alimentation	CA 50 Hz/60 Hz, 110V/120V/220V/240V
Dimensions (L×H×Pr)	430 × 86 × 289 mm
Poids	3,0 kg

■ LOCATION OF CONTROLS

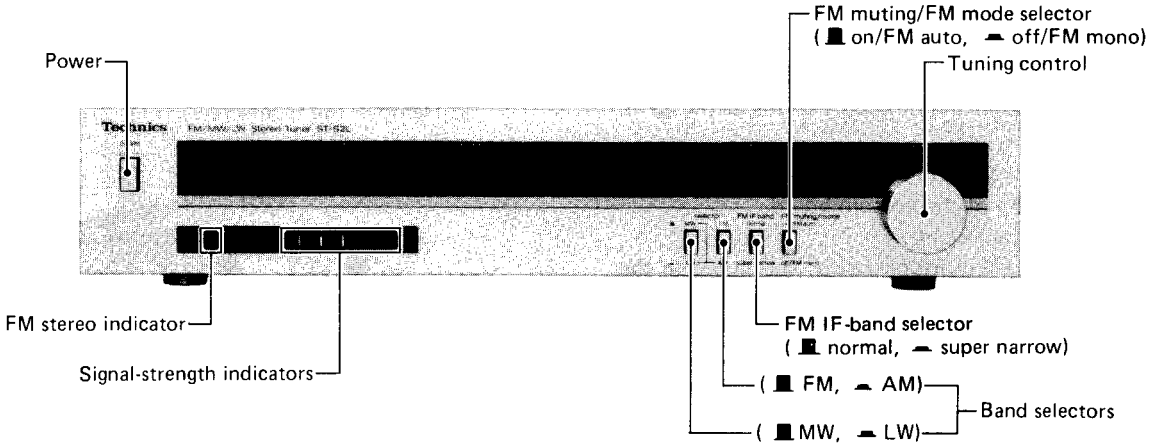

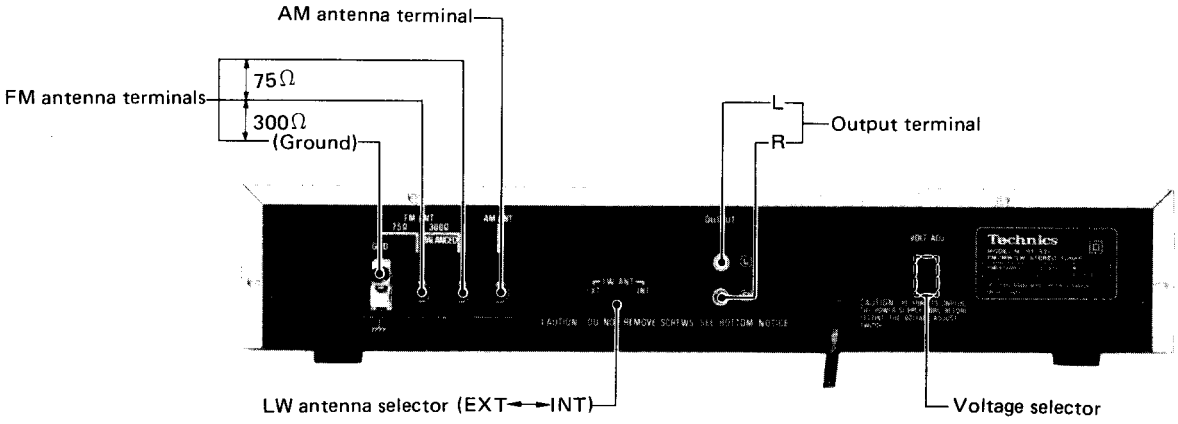

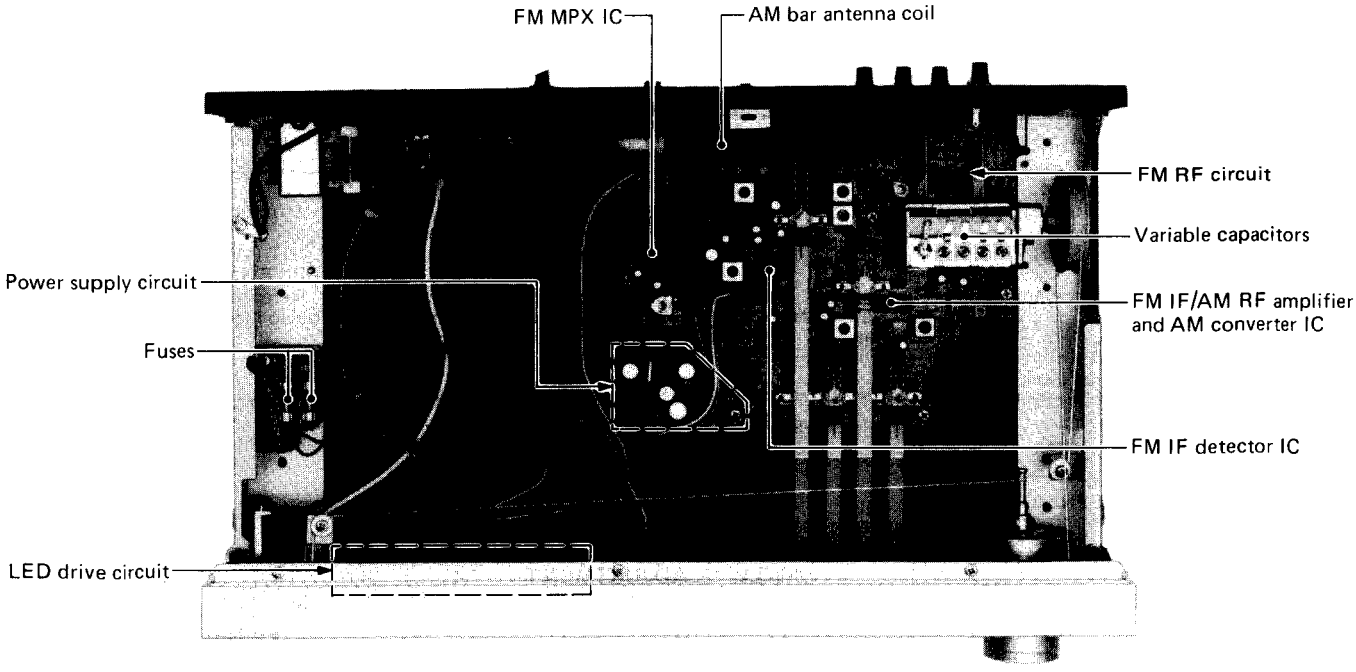

■ DISASSEMBLY INSTRUCTIONS

• How to remove the cabinet and bottom board

1. Remove the 2 setscrews (Fig. 1 : ❶, ❷) on the side and 4 setscrews (Fig. 1 : ❸ ~ ❻) on the rear of the cabinet.
2. Move the cabinet in the direction of the arrow Ⓐ in Fig. 1.
3. To remove the bottom board, remove the 8 setscrews (Fig. 2 : ❼ ~ ⓫) of the bottom board.
4. Remove the bottom board.
5. When installing the bottom board, the board in the groove provided in the rear panel and then tighten the setscrews. (Fig. 2)

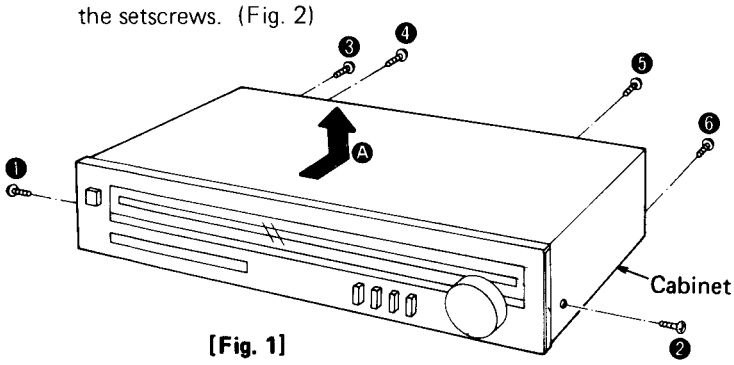

[Fig. 1]

• How to remove the front panel

1. Remove the cabinet (Refer to the procedures 1 to 2 of "How to remove" for cabinet.)
2. Remove the tuning knob.
3. Remove the 6 setscrews (Fig. 2: ⓬ and ⓯ ~ ⓳) of the front panel.

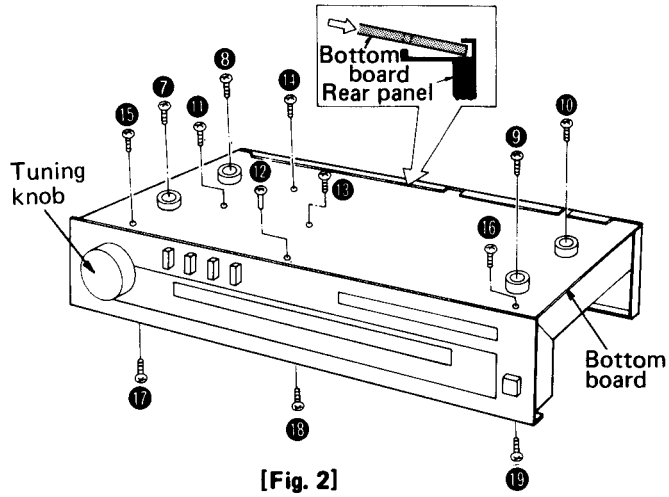

[Fig. 2]

■ DIAL CORD INSTALLATION GUIDE

For threading a fresh cord, proceed as follows.

1. Prepare a fresh cord more than 180 cm (70-15/16") in length.
2. Bring the variable capacitor into a state where the drum is completely turned to the right (maximum capacity and lowest frequency for the variable capacitor).
3. Direct the cord in the order from 1 to 8.
4. Stretch the cord in such a tension as the spring length is elongated by 1.5 times that of the original state.
5. Fix the knot of the cord with the bond.

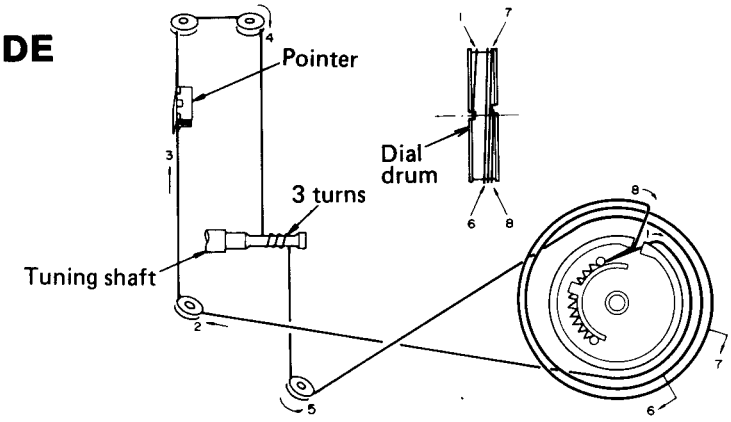

■ MEASUREMENTS AND ADJUSTMENTS ■ English

Be sure to make the adjustments of MW and LW in the order of step No.

• Setting and Equipment used

1. AC and DC electronic voltmeters (VTVM).
2. AM signal generator (AM-SG)
3. FM signal generator (FM-SG).
4. Oscilloscope
5. Frequency counter (19kHz and 108MHz measurable).
6. Band selector switch. . . . . {AM (MW/LW Adjustment.) {FM (FM adjustment)
7. FM muting & mode switch . . . . . off/mono
8. Maintain line voltage at rated voltage.
9. LW antenna selector. . . . . {INT (LW-INT-RF Adjustment). {EXT (LW-EXT-RF Adjustment).
10. 300Ω FM dummy antenna. . . . . Refer to fig. 3.
11. Output of signal generator should be no higher than necessary to obtain an output reading.

• Preparation of FM signal generator (FM-SG)

1. Connect stereo modulator to FM-SG.
2. Apply SG output to antenna terminal of the set through 300Ω FM dummy antenna.
3. The standard input of the set is 60 dB (1mV), 400 Hz 100% modulation (Because of using dummy antenna, SG output must be 12 dB plus (IHF). That is, when input is 60 dB, SG output is to be 72 dB.)

Step No.	AM/FM SIGNAL GENERATOR CONNECTION	AM/FM SIGNAL GENERATOR FREQUENCY	DIAL SETTING	INDICATOR (VTVM or SCOPE)	ADJUSTMENT POINTS	REMARKS
	MW/LW IF ADJUSTMENT					
1	Connect AM-SG to AM antenna terminal through 200pF capacitor. Common to chassis. (Powerful input)	450kHz (30% Mod. with 400 Hz) (For United Kingdom to 468kHz)	Point of non-inter-ference	Connect AC VTVM or scope to "OUTPUT" terminals.	T201 (1st IFT) T202 (2nd IFT)	• Adjust the input frequency and adjustment points so that the output becomes maximum.

	AM/FM SIGNAL GENERATOR CONNECTION	AM/FM SIGNAL GENERATOR FREQUENCY	DIAL SETTING	INDICATOR (VTVM or SCOPE)	ADJUSTMENT POINTS	REMARKS
	MW-RF ADJUSTMENT					
2	Connect AM-SG to AM antenna terminal through 200pF capacitor. Common to chassis. (Weak input)	600kHz (30% Mod. with 400 Hz)	600kHz	Connect AC VTVM or scope to "OUTPUT" terminals.	L252 (MW OSC Coil) L250 (MW ANT Coil)	• Adjust for maximum output. Adjust L250 (MW Coil) by moving coil bobbin along ferrite core.
3		1500kHz (30% Mod. with 400 Hz)	1500kHz	Connect AC VTVM or scope to "OUTPUT" terminals.	CT202 (MW OSC Trimmer) CT201 (MW ANT Trimmer)	• Adjust for maximum output. • Repeat steps (2) and (3).
	LW INT-RF ADJUSTMENT					
4	Connect AM-SG to AM antenna terminal through 200pF capacitor. Common to chassis. (Weak input)	145kHz (30% Mod. with 400 Hz)	145kHz	Connect AC VTVM or scope to "OUTPUT" terminals.	L253 (LW OSC Coil) L250 (LW INT ANT Coil)	• Adjust for maximum output. • Adjust L250 (LW Coil) by moving coil bobbin along ferrite core.
5		350kHz (30% Mod. with 400 Hz)	350kHz	Connect AC VTVM or scope to "OUTPUT" terminals.	CT252 (LW OSC Trimmer) CT250 (LW INT ANT Trimmer)	• Adjust for maximum output. • Repeat steps (4) and (5).
	LW EXT-RF ADJUSTMENT					
6	Connect AM-SG to AM antenna terminal through 200pF capacitor. Common to chassis. (Weak input)	145kHz (30% Mod. with 400 Hz).	145kHz	Connect AC VTVM or scope to "OUTPUT" terminals.	L251 (LW EXT ANT Coil)	• Adjust for maximum output.
7		350kHz (30% Mod. with 400 Hz)	350kHz	Connect AC VTVM or scope to "OUTPUT" terminals.	CT251 (LW EXT ANT Trimmer)	• Adjust for maximum output. • Repeat steps (6) and (7).
	FM-IF ADJUSTMENT					
8	————	No Signal	Point of non-inter-ference	Connect DC VTVM between 17 and 18 terminal through choke coil. (Refer to Fig. 4)	T101 (Discri. IFT)	• FM muting/ mode switch to "on/auto" position. • Adjust T101 core so that voltage measured in signal mode is 0V in 300mV range.
	FM-RF ADJUSTMENT					
9	Connect to FM 300Ω antenna terminal through 300Ω FM dummy antenna.	90MHz (100% Mod. with 400 Hz) weak input.	90MHz	Connect scope to "OUTPUT" terminal.	L4 (OSC Coil) L2 (RF DET Coil) L1 (ANT Coil)	• Add weak input so that noise is included in the output wave form. • Make the adjustment so that the output wave form is vertically symmetrical. (Fig. 5) • Repeat the steps (9) and (10) until the frequency correctly matches the dial scale.
10		106MHz (100% Mod. with 400 Hz) weak input.	106MHz	Connect scope to "OUTPUT" terminal.	CT3 (OSC Trimmer) CT2 (RF DET Trimmer) CT1 (ANT Trimmer)	
	FM MPX V.C.O ADJUSTMENT					
	USING A FREQUENCY COUNTER			USING ALTERNATE SYSTEM		
11	1. 100MHz 60 dB Non-modulated mono signal applied to set. 2. FM muting/mode switch to "on/auto". 3. Connect frequency counter to TP301 through resistor (100kΩ). 4. Adjust **VR301** to 19kHz ± 30 Hz.			1. Apply stereo signal from generator or stereo station to tuner. 2. Adjust **VR301** until stereo indicator lights up. Cement arm of **VR301** as shown in fig. 6.		

■ MESSUNGEN UND JUSTIERUNGEN ■ Deutsch ■

(Für Deutschland) Darauf achten, die Justierung von MW und LW in der Reihenfolge der Schrittnummer vorzunehmen.

- **Stellungen und zu benutzende Geräte**

1. Elektronische Voltmeter für Wechsel-und Gleichstrom (VTVM).
2. AM (MW)-Meßsender (AM-SG)
3. UKW-Meßsender (FM-SG)
4. Oszilloskop
5. Signalfrequenzmesser (meßbar für 19kHz und 108MHz).
6. Bereichsschalter . . . . . {AM (MW/LW Abgleich) / FM (UKW Abgleich)
7. FM Muting/Mode Schalter. . . . . off/mono.
8. Die Netzspannung auf ihren Sollwert einstellen.
9. LW-Antennenschalter. . . . . {INT (LW-INT-HF Abgleich) / EXT (LW-EXT-HF Abgleich)
10. UKW-Kunstantenne, 300 ohm . . .Vgl. Abb. 1.
11. Der Ausgang des Meßsenders darf nicht höher sein als unbedingt notwendig für eine gute ablesung.

- **Vorbereitung AM UKW-Messender (FM-SG)**

1. Stereo-Modulator an FM-SG anschließen.
2. SG-Ausgang über 300-ohm UKW Kunstantenne an den Antenneneingang des Gerätes schließen.
3. Der normale Eingang des Gerätes beträt 60 dB (1mV), 400 Hz 100% Modulation. (Wegen Verwendung der Kunstantenne muß der Signalausgang 12 dB plus (IHF) sein: d.h. beim Eingang von 60 dB soll der Signalausgang 72 dB sein.)

	AM/UKW MESSENDER		SKALENZEI-GEREIN-STELLUNG DES TUNER	ANZEIGEGEIRÄT (Röhrenvoltmeter order Oszillograph)	ABGLEICHS-PUNKTE	BEMERKUNGEN
	ANSCHLUSS	FREQUENZ				
	MW/LW-ZF-ABGLEICH					
1	Einen MW-Signal-generator über einen 200pF Kondensator mit dem MW-Antenneneing-ang verbinden. Die gemeinsame Leitung mit dem Chassis verbinden. (Starker Eingang)	450kHz (400 Hz Modulat., 30%)	Kein Empfang	Wechselstrom Röhrenvolt-meter oder Oszillograph über den Ausgang "OUTPUT" schließen.	T201 (1. IFT) T202 (2. IFT)	Die Eingangsfrequenz und die Einstellungspunkte so adustie-ren, daß der Ausgang den maximalen Wert erreicht.
	MW-HF-ABGLEICH					
2	Einen MW-Signal-generator über einen 200pF Kondensator mit dem MW-Anten-neneingang verbinden. Die gemeinsame Leitung mit dem Chassis verbinden. (Schwacher Eingang)	600kHz (400 Hz Modulat., 30%)	600kHz	Wechselstrom Röhrenvolt-meter oder Oszillograph über den Ausgang "OUTPUT" schließen.	L252 (MW Osc. Spule) L250 (MW Ant. Spule)	• Auf max. Ausgang abgleichen. • L250 (MW Spule) wird abgleichen, in dem die Spule am Ferritstab entlang-geschoben wird.
3		1500kHz (400 Hz Modulat., 30%)	1500kHz	Wechselstrom Röhrenvolt-meter oder Oszillograph über den Ausgang "OUTPUT" schließen.	CT202 (MW-Osc. Trimmer) CT201 (MW Ant. Trimmer)	• Auf max. Ausgang abgleichen. • Schritt (2) und (3) sind zu wiederholen.
	LW INT-HF-ABGLEICH					
4	Einen MW-Signal-generator über einen 200pF Kondensator mit dem MW-Anten-neneingang verbinden. Die gemeinsame Leitung mit dem Chassis verbinden. (Schwacher Eingang)	145kHz (400 Hz Modulat., 30%)	145kHz	Wechselstrom Röhrenvolt-meter oder Oszillograph über den Ausgang "OUTPUT" schließen.	L253 (LW Osc. Spule) L250 (LW INT Ant. Spule)	• Auf max. Ausgang abgleichen. • L250 (LW Spule) wird abgleichen, in dem die Spule am Ferritstab entlanggeschoben wird.
5		350kHz (400 Hz Modulat., 30%)	350kHz	Wechselstrom Röhrenvolt-meter oder Oszillograph über den Ausgang "OUTPUT" schließen.	CT252 (LW Osc. Trimmer) CT250 (LW INT Ant. Trimmer)	• Auf max. Ausgang abgleichen. • Schritt (4) und (5) sind zu wiederholen.
	LW EXT-HF-ABGLEICH					
6	Einen MW-Signal-generator über einen 200pF Kondensator mit dem MW-Antenneneing-ang verbinden. Die gemeinsame Leitung mit dem Chassis verbinden. (Schwacher Eingang)	145kHz (400 Hz Modulat., 30%)	145kHz	Wechselstrom Röhrenvolt-meter oder Oszillograph über den Ausgang "OUTPUT" schließen.	L251 (LW EXT Ant. Spule)	• Auf max. Ausgang abgleichen.
7		350kHz (400Hz Modulat., 30%)	350kHz	Wechselstrom Röhrenvolt-meter oder Oszillograph über den Ausgang "OUTPUT" schließen.	CT251 (LW EXT Ant. Trimmer)	• Auf max. Ausgang abgleichen. • Schritt (6) und (7) sind zu wiederholen.
	UKW-ZF-ABGLEICH					
8	———	Kein Signal	Kein Empfang	Ein Gleichstromrören-voltmeter zwischen 17 und 18 über eine Drosselspule verbinden. (Siehe Abb. 2)	T101 (Diskriminator FT)	• FM muting/mode-Schalter auf "on/auto" stellen. • Den Kern von T101 so justieren, daß die gemessene Spannung im signallosen Modus 0V im 300mV Bereich beträgt.
	UKW-HF-ABGLEICH					
9	Meßsender über eine Kunstantenne an den UKW-Antenneneingang schließen.	90MHz (400Hz Modulat., 100%) Schwacher Eingang	90MHz	Oszillograph über den Ausgang "OUTPUT" schließen.	L4 (Osc. Spule) L2 (Det. Spule) L1 (Ant. Spule)	• Einen schwachen Eingang geben, bei dem Geräusch in der Ausgangswellen-form enthalten wird. • So einstellen, daß die Ausgangswellenform vertikal symmetrisch wird. (Abb. 3) • Die Einstellung von (9), (10) wieder holen, bis die Frequenz mit der Skala übereinstimmt.
10		106MHz (400 Hz Modulat., 100%) Schwacher Eingang	106MHz	Oszillograph über den Ausgang "OUTPUT" schließen.	CT3 (Osc. Trimmer) CT2 (Det. Trimmer) CT1 (Ant. Trimmer)	
	UKW-STEREO-DEKODER-ABGLEICH					
	UNTER VERWENDUNG EINES ZÄHLERS			ALTERNATIV-MEß METHODE		
11	1. Unmodulierts Mono-Signal 100MHz in das Gerät speisen. 2. FM muting/mode-Schalter auf "on/auto" stellen. 3. Zähler über einen Widerstand 100k ohm an TP301 schließen. 4. **VR301** auf 19kHz ± 30 Hz einstellen.			1. Stereosignal entweder von einem Stereogenerator. oder einem Sender einspeisen. 2. **VR301** so einstellen, bis die Stereolampe auf leuchtet. Schleifer von **VR301** sichern, wie in Abb. 4 gezeigt.		

■ MESURAGES ET RÉGLAGES — Français

Veuillez régler PO et GO par ordre des numeros de procédélé

- **Réglage et équipement utilisé**

1. Voltmètres électronique de courant alternatif et de courant continu (VTVM).
2. Générateur du signal AM (AM-SG).
3. Générateur du signal FM (FM-SG).
4. Oscilloscope
5. Compteur de fréquence (19kHz et 108MHz mesurable).
6. Sèlecteur de gamme. . . . . { AM (Alignement MW/LW) / FM (Alignement FM)
7. Commutateur de silencieux/mode. . . . off/mono
8. Conserver la tension du secteur à la tension nominale.
9. Antenne selecteur LW (GO). . . . { INT (LW-INT Alignement). / EXT (LW-EXT Alignement)
10. Antenne fictive FM 300Ω . . . . . .Voir fig. 3.
11. Le signal du générateur ne doit pas être plus élevé qu'il n'est nécessaire à obtenir une lecture en sortie.

- **Préparation du générateur de signal FM (FM-SG)**

1. Brancher la commande de réglage stéréophonique à FM-SG.
2. Alimenter la sortie SG à la borne de l'antenne de l'appareil, par l'antenne fictive FM, 300 ohms.
3. L'entrée standard de l'appareil est de 60 dB (1mV), 400Hz, 100% de modulation (à cause de l'utilisation de l'antenne fictive, la sortie SG doit être de plus 12 dB (IHF). Ce qui signifie que quand l'entrée est de 60 dB, la sortie SG doit être de 72 dB.)

No.	AM/FM GENERATEUR BRANCHEMENT	AM/FM GENERATEUR FREQUENCE	AIGUILLE SUR LE CADRAN	INDICATEUR (VOLTMETRE ELECTRONIQUE OSCILLOSCOPE)	POINTS DE REGLAGE	OBSERVATIONS
	ALIGNEMENT FI-MW (PO)-LW (G)					
1	Brancher le AM-SG à la borne de l'antenne AM par un condensateur de 200pF. Commun au châssis (Entrée sous puissante)	450kHz (modulè à 30% par 400 Hz)	Point sans signal	C.A voltmètre èlectronique ou oscilloscope sur prise de sortie de l'appareil.	T201 (1 transfo FI) T202 (2 transfo FI)	• Régler la fréquence d'entrée et les points de réglage de telle sorte que la sortie devienne maximale.
	ALIGNEMENT RF-MW (PO)					
2	Brancher le AM-SG à la borne de l'antenne AM par un condensateur de 200pF. Commun au châssis. (Entrée faible)	600kHz (modulé à 30% par 400 Hz)	600kHz	C.A. voltmètre électronique ou oscilloscope sur prise de sortie de l'appareil.	L252 (bobine OSC MW) L250 (bobine ANT MW)	• Réglez au maximum de signal de sortie. • Régler L250 (bobine MW) en déplacant la bobine le long du noyau de ferrite.
3		1500kHz (modulé à 30% par 400 Hz)	1500kHz	C.A. voltmètre électronique ou oscilloscope sur prise de sortie de l'appareil.	CT202 (trimmer OSC MW) CT201 (trimmer ANT MW)	• Réglez au maximum de signal de sortie. • Recommencez les étapes (2) et (3).
	ALIGNEMENT RF-LW (GO) INT					
4	Brancher le AM-SG à la borne de l'antenne AM par un condensateur de 200pF. Commun au châssis. (Entrée faible)	145kHz (modulé à 30% par 400 Hz)	145kHz	C.A. voltmètre électronique ou oscilloscope sur prise de sortie de l'appareil.	L253 (bobine OSC LW) L250 (bobine ANT LW INT)	• Réglez au maximum de signal de sortie. • Régler L250 (bobine LW) en déplaçant la bobine le long du noyau de ferrite.
5		350kHz (modulé à 30% par 400 Hz)	350kHz	C.A voltmètre électronique ou oscilloscope sur prise de sortie de l'appareil.	CT252 (trimmer OSC LW) CT250 (trimmer ANT LW INT)	• Réglez au maximum de signal de sortie. • Recommencez les étapes (4) et (5).
	ALIGNEMENT RF-LW (GO) EXT					
6	Brancher le AM-SG à la borne de l'antenne AM par un condensateur de 200pF. Commun au châssis. (Entrée faible)	145kHz (modulé à 30% par 400 Hz)	145kHz	C.A. voltmètre électronique ou oscilloscope sur prise de sortie de l'appareil.	L251 (bobine ANT LW EXT)	• Réglez au maximum de signal de sortie.
7		350kHz (modulé à 30% par 400 Hz)	350kHz	C.A. voltmètre électronique ou oscilloscope sur prise de sortie de l'appareil.	CT251 (trimmer ANT LW EXT)	• Réglez au maximum de signal de sortie. • Recommencez les étapes (6) et (7).
	ALIGNEMENT FI-FM					
8	————	Sans signal	Point sans signal	Brancher le voltmètre électronique a.c.c. aux bornes 17 et 18. (Voir la Fig. 4)	T101 (Transfo FI discri.)	• Commutateur de silencieux sur "on/auto". • Régler le noyau T101 de telle sorte que le voltage mesuré dans le mode sans signal, soti de 0V dans la gamme des 300mV.
	ALIGNEMENT RF-FM					
9	Branchez sur la prise d'antenne FM à travers une antenne fictive FM.	90 MHz (modulé à 100% par 400 Hz) Entrée faible	90 MHz	Oscilloscope sur prise de sorite du tuner.	L4 (bobine OSC) L2 (bobine DET) L1 (bobine ANT)	• Appliquer une entrée faible de telle sorte que le parasite soit compris dans la forme de l'onde de sortie. • Faire le réglage de telle sorte que la forme de l'onde de sortie soit verticalement symétrique. (Voir fig. 5) • Refaire les réglages (9) et (10). jusqu'à ce que la fréquence corresponde correctement avec l'échells du cadran.
10		106 MHz (modulé à 100% par 400 Hz) Entrée faible	106 MHz	Oscilloscope sur prise de sortie du tuner.	CT3 (trimmer OSC) CT2 (trimmer DET) CT1 (trimmer ANT)	

ALIGNEMENT DU PILOTE MULTIPLEX FM	
AVEC UN ERÉQUENCEMÉNTRE	PAR UN OUTRE SYSTÈME
1. Signal mono 100MHz non modulé appliqué à l'appareil. 2. Commutateur de silencieux sur "on/auto". 3. Branchez le fréquencemètre sur TP301 à travers une 4. Régler **VR301** sur 19kHz ± 30 Hz.	1. Appliquez à l'appareil un signal stéréo provenant d'un générateur ou de la réception d'un émetteur. 2. Régler **VR301** jusqu à ce que l'indicateur de stéréophonic s'allume. Collez le curseur le **VR301** comme indiqué sur la fig. 6.

11

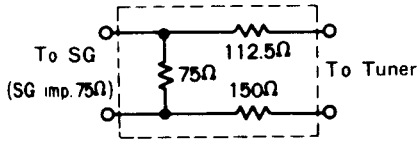

300Ω FM Dummy Antenna

[Fig. 3]
Abb. 1

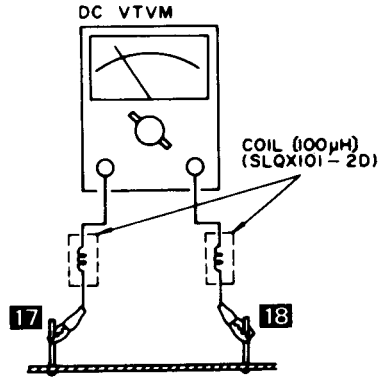

[Fig. 4]
Abb. 2

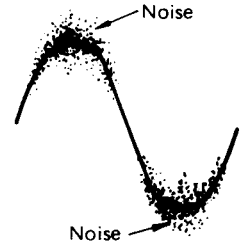

AF output wave form

[Fig. 5]
Abb. 3

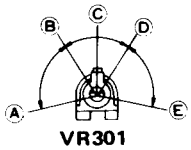

VR301

A – B, D – E: Stereo OFF Position.
B – D: Stereo ON Position (indicator Lighting).
C: Adjust Point of Pilot Circuit.

[Fig. 6]
Abb. 4

■ ADJUSTMENT POINTS

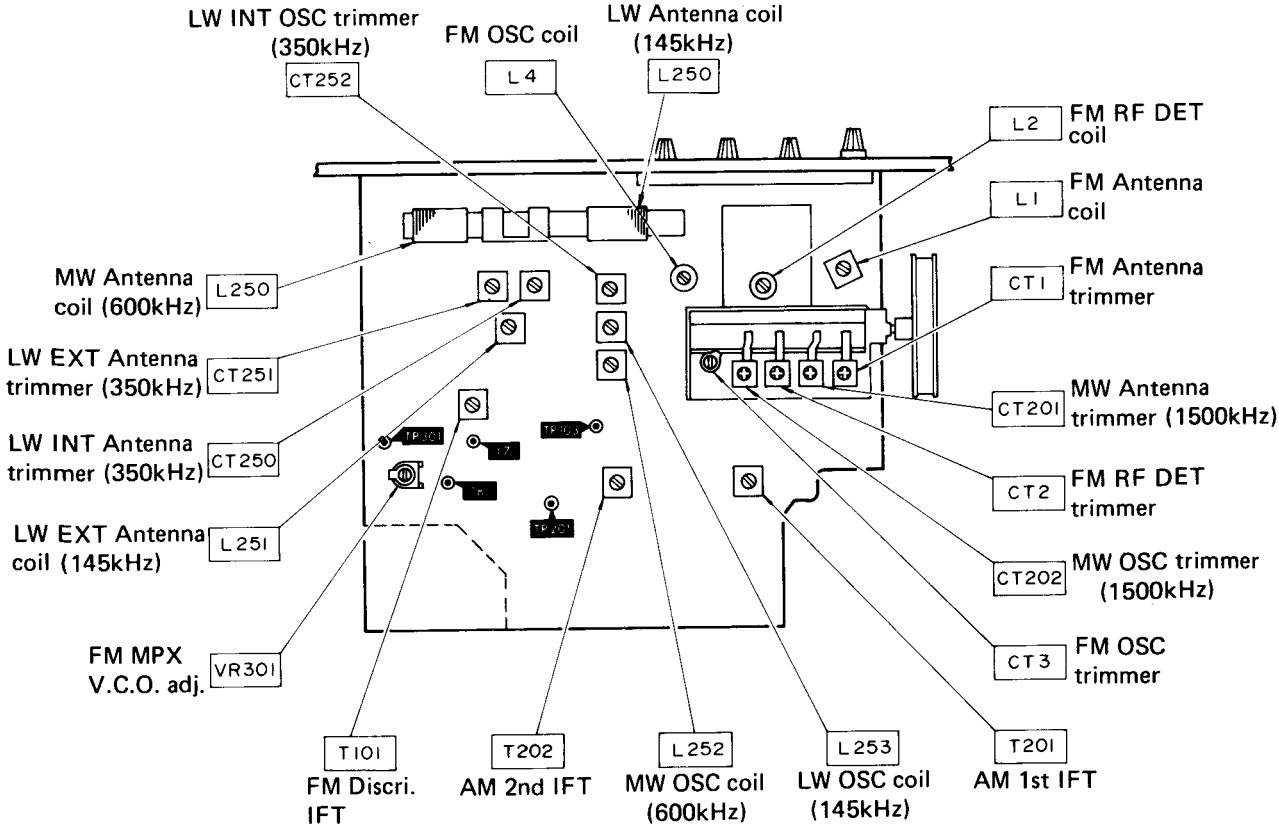

■ BLOCK DIAGRAM

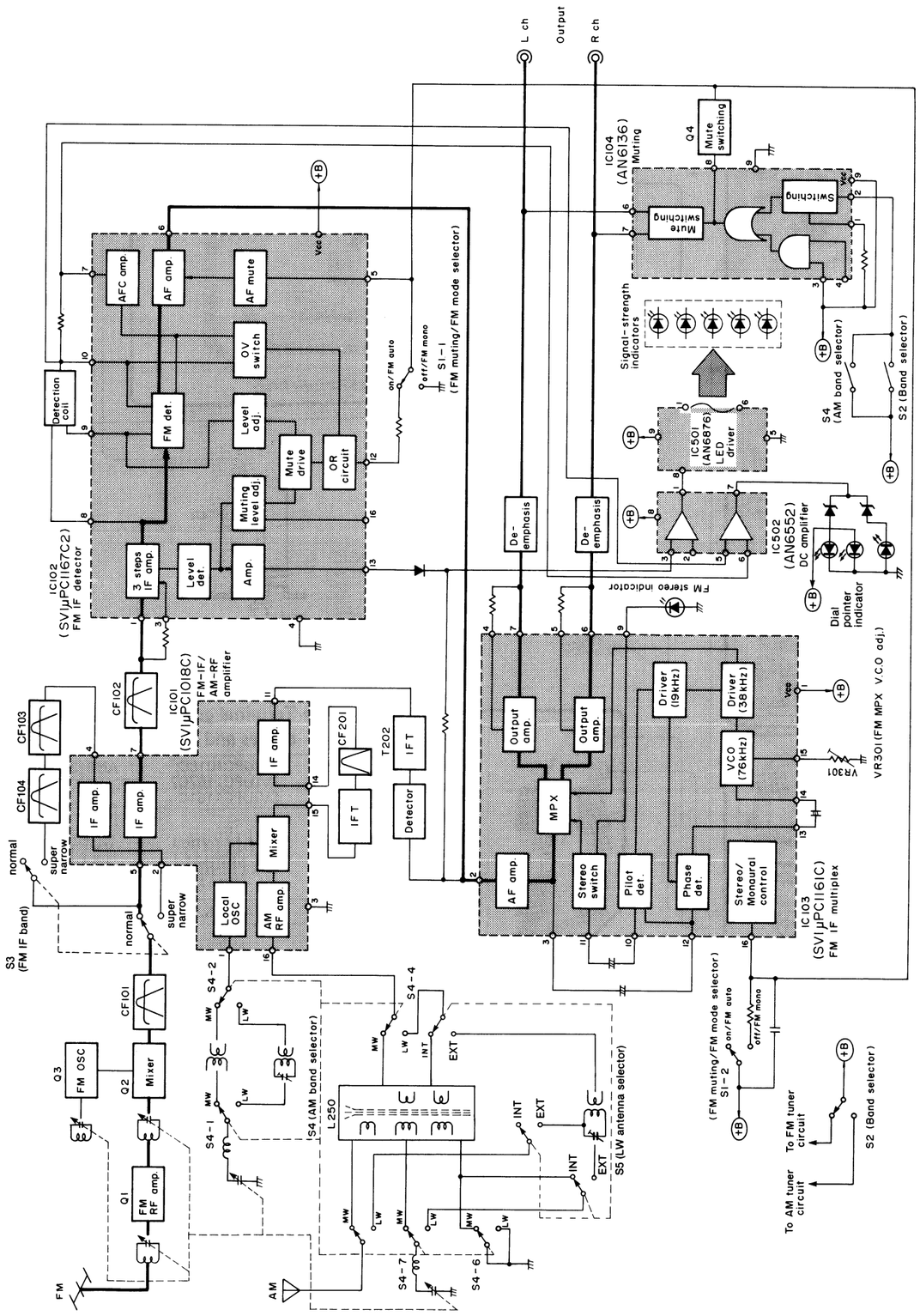

■ REPLACEMENT PARTS LIST ..... Electrical Parts

Notes: 1. Part numbers are indicated on most mechanical parts. Please use this part number for parts orders.
2. Important safety notice: Components identified by ⚠ mark have special characteristics important for safety. When replacing any of these components, use only manufacturer's specified parts.
3. Bracketed indications in Ref. No. columns specify the area. Parts without these indications can be used for all areas.

Ref. No.		Part No.	Part Name & Description
INTEGRATED CIRCUIT			
IC101		RVIUPC1018CF	IC, FM IF Amp. AMRF Amp. AM Converter
IC102		SVIUPC1167C2	IC, FM IF Detector
IC103		SVIUPC1161C	IC, FM Multiplex
IC104		AN6136	IC, Muting
IC501		AN6876	IC, L.E.D Driver
IC502		AN6552F	IC, DC Amp
TRANSISTORS			
Q1		2SK195–H2	Transistor, FM RF Amplifier [FET]
Q2		**2SC1674–M**	Transistor, FM Mixer
Q3		**2SC1675–L**	Transistor, FM Oscillator
Q4		**2SC945–Q**	Transistor, Switching
Q401		2SD762–O	Transistor, Regulator
DIODES			
D101, 202		**20A90**	Diode
D201, 203, 204		**MA162A**	Diode
D401		**SVDEQA0113RA**	Diode, 13V Zener
D402, 403	⚠	**SVDSR1K2**	Rectifier
D501 ~ 503, 510	⚠	**MA162A**	Diode
D504 ~ 508		LN420YP	Light Emiting Diode, Yellow
D509		LN220RP	Light Emiting Diode, Red
COILS and TRANSFORMERS			
L1		SLA4N15	Coil, FM Antenna
L2		SLD4P57–P	Coil, FM Detector
L3		ELQ5A77	Coil, Choke
L4		SLO4P95–P	Coil, FM Local Oscillator
L101		SLQX101–3M	Coil, Choke
L250		SLF6E9–O	Coil, AM Ferrite Bar Antenna
L251		SLA1C7	Coil, LW Antenna
L252		SLO2C1–P	Coil, MW Oscillator
L253		SLO1C13–P	Coil, LW Oscillator
L254, 255		RLQY15G5–O	Coil, Choke
T101		SLI4C521	Transformer, FM IF
T201		SLI2C129R–M	Transformer, AM IF
T202		SLI2C413R	Transformer, AM IF
T401	⚠	SLT5J141–W	Transformer, Power Source
CERAMIC FILTERS			
CF101, 102		SVFE107MM–A	Ceramic Filter, FM 10.7MHz Red
		SVFE107MM–B	Ceramic Filter, FM 10.68MHz Blue
		SVFE107MM–C	Ceramic Filter, FM 10.72MHz Orange
CF103, 104		SVFE107MZ2–A	Ceramic Filter, FM 10.7MHz Red
		SVFE107MZ2–B	Ceramic Filter, FM 10.675MHz Blue
		SVFE107MZ2–C	Ceramic Filter, FM 10.725MHz Orange (Use pair ranks as same as CF101, CF102, CF103 and CF104)
CF201		SVFSFU450B3	Ceramic Filter, AM 457kHz
CF201 [EK] only		SVFSFU468B	Ceramic Filter, AM 475kHz
VERIABLE CAPACITORS			
VC1 ~ 3, 201, 202 (CT1 ~ 3, 201, 202)		ECV5MD34X71G	Variable Capacitor, FM & AM (With Trimmer)
CT250 ~ 252		SVCTY122D221	Trimmer, LW Antenna, Oscillator
VARIABLE RESISTOR			
VR301		**EVTS3MA00B53**	FM MPX VCO Adjustment
FUSES			
F1	⚠	XBA2C06TR0	Fuse, T0.63A (250V)
F2	⚠	XBA2C03TR0	Fuse, T0.315A (250V)
SWITCHES			
S1, 2		SSH2009	Switch, FM/AM Selector, Muting
S3		SSH187–1	Switch, FM IF Band
S4		SSH115	Switch, MW/LW Selector
S5		RSS42A	Switch, LW Antenna Selector
S6	⚠	ESE372	Switch, Voltage Adjuster
S8	⚠	ESB90619A	Switch, Power Source

Ref. No.		Part No.	Part Name & Description
RESISTORS			
R1		**ERD25TJ104**	Carbon, 1/4W, 100kΩ, ± 5%
R2		**ERD25FJ220**	Carbon, 1/4W, 22Ω, ± 5%
R3		**ERD25FJ221**	Carbon, 1/4W, 220Ω, ± 5%
R4		**ERD25TJ474**	Carbon, 1/4W, 470kΩ, ± 5%
R5		**ERD25FJ471**	Carbon, 1/4W, 470Ω, ± 5%
R6		**ERD25TJ393**	Carbon, 1/4W, 39kΩ, ± 5%
R7		**ERD25FJ102**	Carbon, 1/4W, 1kΩ, ± 5%
R8		**ERD25FJ103**	Carbon, 1/4W, 10kΩ, ± 5%
R9		**ERD25FJ102**	Carbon, 1/4W, 1kΩ, ± 5%
R10		**ERD25FJ181**	Carbon, 1/4W, 180Ω, ± 5%
R11		**ERD25TJ104**	Carbon, 1/4W, 100kΩ, ± 5%
R101		**ERD25FJ561**	Carbon, 1/4W, 560Ω, ± 5%
R102		**ERD25FJ471**	Carbon, 1/4W, 470Ω, ± 5%
R103		**ERD25FJ331**	Carbon, 1/4W, 330Ω, ± 5%
R104		**ERD25FJ471**	Carbon, 1/4W, 470Ω, ± 5%
R105		**ERD25FJ680**	Carbon, 1/4W, 68Ω, ± 5%
R106		**ERD25TJ184**	Carbon, 1/4W, 180kΩ, ± 5%
R107		ERO25CKF3002	Metal Film, 1/4W, 30kΩ, ± 5%
R108		**ERD25TJ393**	Carbon, 1/4W, 39kΩ, ± 5%
R109		**ERD25FJ682**	Carbon, 1/4W, 6.8kΩ, ± 5%
R110		**ERD25TJ333**	Carbon, 1/4W, 33kΩ, ± 5%
R111		**ERD25FJ182**	Carbon, 1/4W, 1.8kΩ, ± 5%
R114		**ERD25TJ333**	Carbon, 1/4W, 33kΩ, ± 5%
R117		**ERD25TJ123**	Carbon, 1/4W, 12kΩ, ± 5%
R119		**ERD25TJ563**	Carbon, 1/4W, 56kΩ, ± 5%
R126		**ERD25FJ392**	Carbon, 1/4W, 3.9kΩ, ± 5%
R201		**ERD25FJ103**	Carbon, 1/4W, 10kΩ, ± 5%
R202		**ERD25FJ392**	Carbon, 1/4W, 3.9kΩ, ± 5%
R203		**ERD25TJ333**	Carbon, 1/4W, 33kΩ, ± 5%
R204		**ERD25FJ272**	Carbon, 1/4W, 2.7kΩ, ± 5%
R205		**ERD25FJ471**	Carbon, 1/4W, 470Ω, ± 5%
R206		**ERD25FJ271**	Carbon, 1/4W, 270Ω, ± 5%
R207, 208		**ERD25TJ104**	Carbon, 1/4W, 100kΩ, ± 5%
R209		**ERD25FJ102**	Carbon, 1/4W, 1kΩ, ± 5%
R210		**ERD25TJ273**	Carbon, 1/4W, 27kΩ, ± 5%
R211		**ERD25TJ104**	Carbon, 1/4W, 100kΩ, ± 5%
R212		**ERD25FJ332**	Carbon, 1/4W, 3.3kΩ, ± 5%
R223		**ERD25FJ103**	Carbon, 1/4W, 10kΩ, ± 5%
R224		**ERD25FJ472**	Carbon, 1/4W, 4.7kΩ, ± 5%
R302		**ERD25FJ470**	Carbon, 1/4W, 47Ω, ± 5%
R303, 304		**ERD25TJ223**	Carbon, 1/4W, 22kΩ, ± 5%
R305, 306		**ERD25TJ473**	Carbon, 1/4W, 47kΩ, ± 5%
R307		**ERD25TJ274**	Carbon, 1/4W, 270kΩ, ± 5%
R308		**ERD25TJ153**	Carbon, 1/4W, 15kΩ, ± 5%
R309		**ERD25TJ473**	Carbon, 1/4W, 47kΩ, ± 5%
R310		**ERD25FJ391**	Carbon, 1/4W, 390Ω, ± 5%
R311, 312		**ERD25FJ332**	Carbon, 1/4W, 3.3kΩ, ± 5%
R313, 314		**ERD25TJ333**	Carbon, 1/4W, 33kΩ, ± 5%
R316		**ERD25FJ103**	Carbon, 1/4W, 10kΩ, ± 5%
R317		**ERD25FJ332**	Carbon, 1/4W, 3.3kΩ, ± 5%
R320		**ERD25TJ153**	Carbon, 1/4W, 15kΩ, ± 5%
R321		**ERD25TJ154**	Carbon, 1/4W, 150kΩ, ± 5%
R322		**ERD25TJ273**	Carbon, 1/4W, 27kΩ, ± 5%
R323		**ERD25TJ124**	Carbon, 1/4W, 120kΩ, ± 5%
R324		**ERD25TJ154**	Carbon, 1/4W, 150kΩ, ± 5%
R325		**ERD25TJ153**	Carbon, 1/4W, 15kΩ, ± 5%
R326		**ERD25TJ104**	Carbon, 1/4W, 100kΩ, ± 5%
R327		**ERD25FJ102**	Carbon, 1/4W, 1kΩ, ± 5%
R401		**ERD25FJ561**	Carbon, 1/4W, 560Ω, ± 5%
R402		**ERD25FJ681**	Carbon, 1/4W, 680Ω, ± 5%
R501		**ERD25FJ332**	Carbon, 1/4W, 3.3kΩ, ± 5%
R502		**ERD25FJ682**	Carbon, 1/4W, 6.8kΩ, ± 5%
R503		**ERD25TJ473**	Carbon, 1/4W, 47kΩ, ± 5%
R504		**ERD25TJ104**	Carbon, 1/4W, 100kΩ, ± 5%
R505		**ERD25FJ152**	Carbon, 1/4W, 1.5kΩ, ± 5%
R506		**ERD25TJ123**	Carbon, 1/4W, 12kΩ, ± 5%
R507		**ERD25TJ563**	Carbon, 1/4W, 56kΩ, ± 5%
R508		**ERD25TJ184**	Carbon, 1/4W, 180kΩ, ± 5%
R509		**ERD25FJ391**	Carbon, 1/4W, 390Ω, ± 5%
R510		**ERD25FJ122**	Carbon, 1/4W, 1.2kΩ, ± 5%
R511		**ERD25FJ272**	Carbon, 1/4W, 2.7kΩ, ± 5%
R512		**ERD25FJ100**	Carbon, 1/4W, 10Ω, ± 5%

Continued on page 16

■ CIRCUIT BOARD AND WIRING CONNECTION DIAGRAM

Ground (Earth) lines

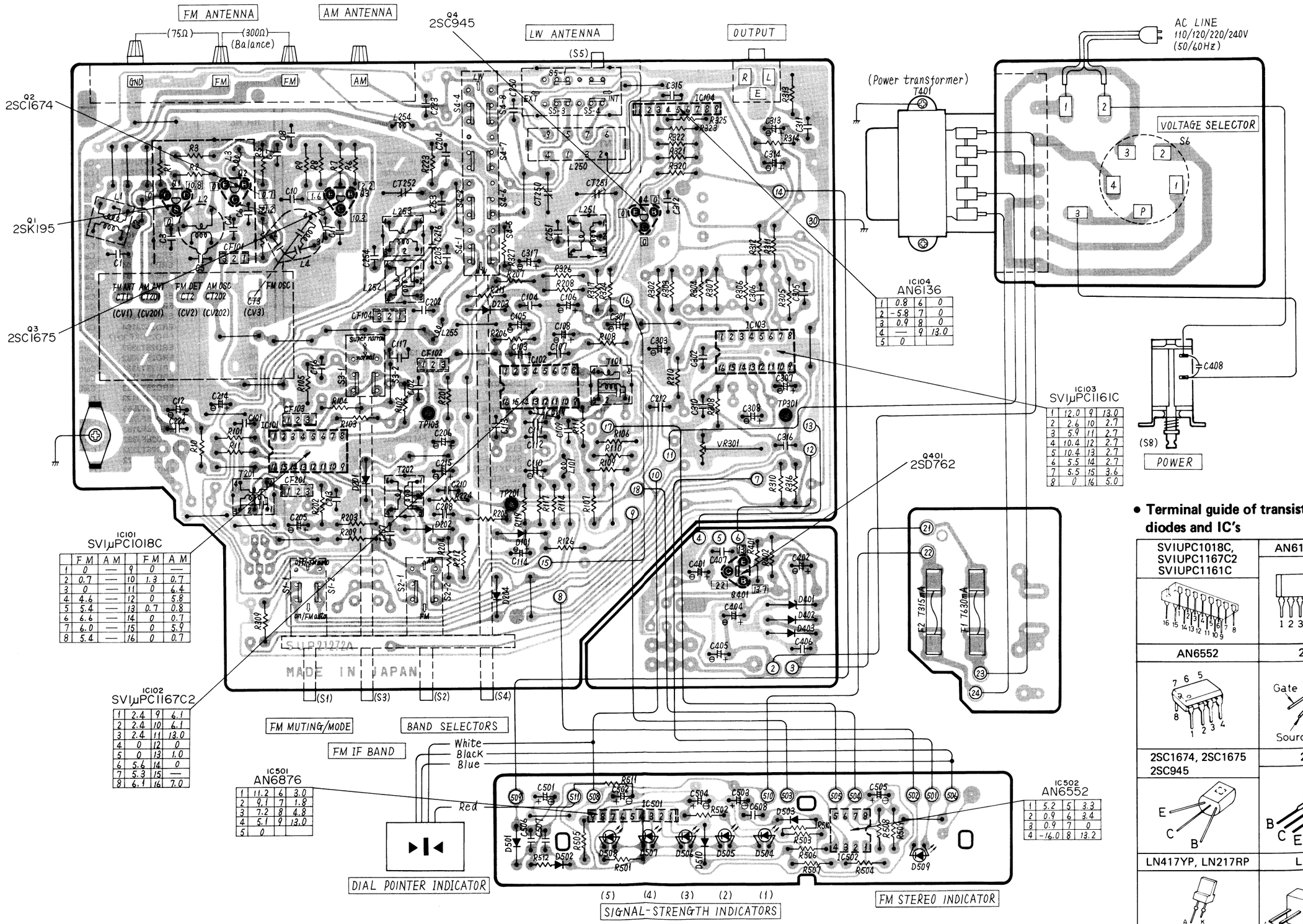

	FM	AM		FM	AM
1	0	—	9	0	—
2	0.7	—	10	1.3	0.7
3	0	—	11	0	6.4
4	4.6	—	12	0	5.8
5	5.4	—	13	0.7	0.8
6	6.6	—	14	0	0.7
7	6.0	—	15	0	5.9
8	5.4	—	16	0	0.7

1	2.4	9	6.1
2	2.4	10	6.1
3	2.4	11	13.0
4	0	12	0
5	0	13	1.0
6	5.6	14	0
7	5.3	15	—
8	6.1	16	7.0

1	0.8	6	0
2	-5.8	7	0
3	0.9	8	0
4	—	9	13.0
5	0		

1	12.0	9	13.0
2	2.6	10	2.7
3	5.9	11	2.7
4	10.4	12	2.7
5	10.4	13	2.7
6	5.5	14	2.7
7	5.5	15	3.6
8	0	16	5.0

1	11.2	6	3.0
2	9.1	7	1.8
3	7.2	8	4.8
4	5.1	9	13.0
5	0		

1	5.2	5	3.3
2	0.9	6	3.4
3	0.9	7	0
4	-16.0	8	13.2

• Terminal guide of transistors, diodes and IC's

SV1UPC1018C, SV1UPC1167C2 SV1UPC1161C	AN6136, AN6876
	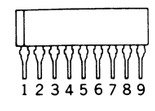
AN6552	2SK195
	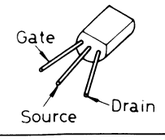
2SC1674, 2SC1675 2SC945	2SD762
	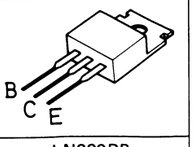
LN417YP, LN217RP	LN220RP
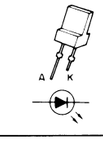	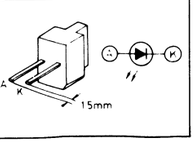

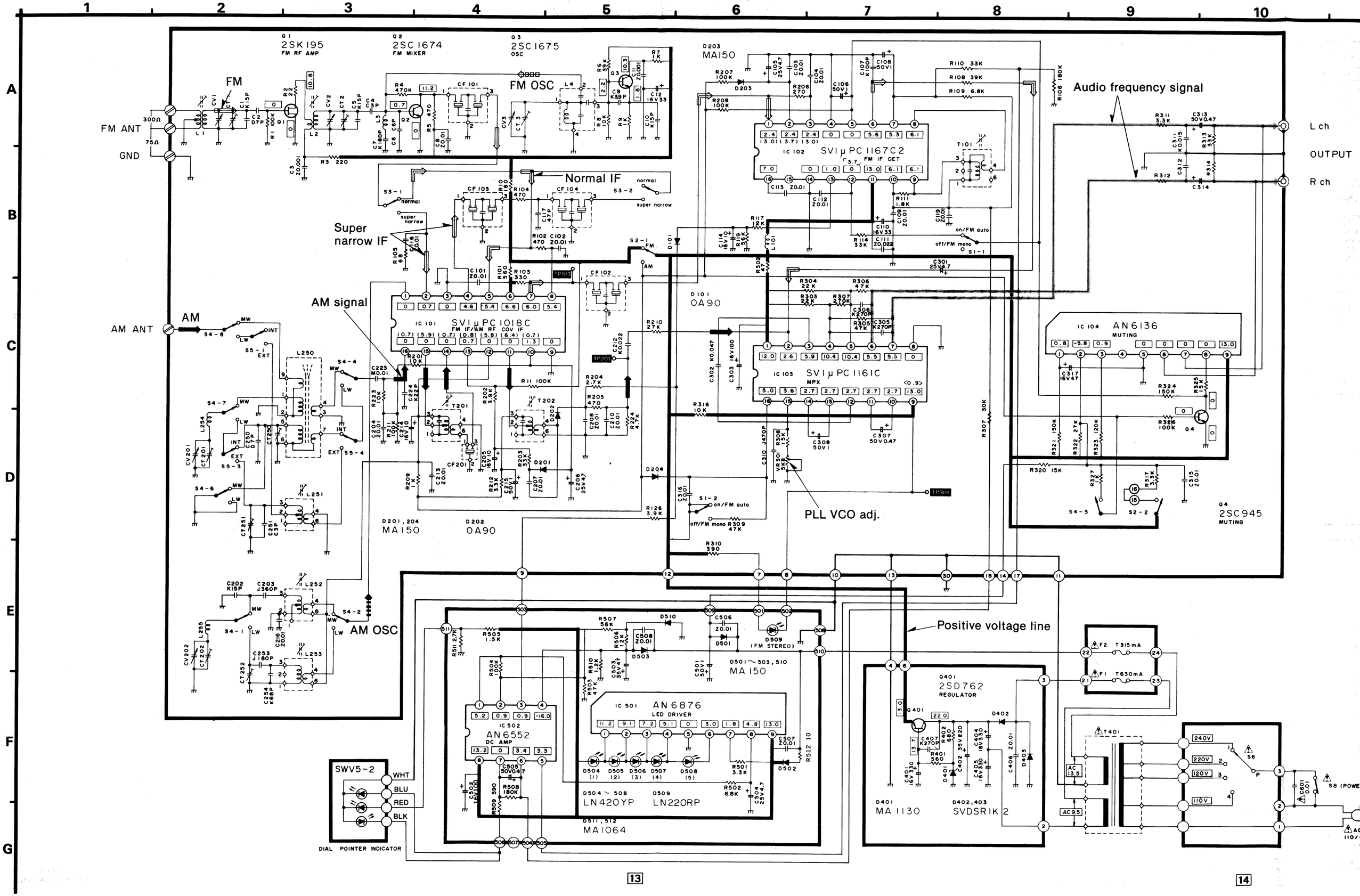
Q1 2SK195 FM RF AMP
Q2 2SC1674 FM MIXER
Q3 2SC1675 OSC
FM
FM ANT
300Ω
75Ω
GND
FM OSC
Normal IF
Super narrow IF
AM signal
AM
AM ANT
AM OSC
D203 MA150
IC 102 SVIμPC1167C2 FM IF DET
T101
Audio frequency signal
L ch
OUTPUT
R ch
IC 101 SVIμPC1018C FM IF/AM RF COV IF
D101 OA90
IC 103 SVIμPC1161C MPX
IC 104 AN6136 MUTING
Q4 2SC945 MUTING
PLL VCO adj.
D201, 204 MA150
D202 OA90
Positive voltage line
IC 501 AN6876 LED DRIVER
IC 502 AN6552 DC AMP
D501 ~ 503, 510 MA150
D504 ~ 508 LN420YP
D509 LN220RP
D511, 512 MA1064
Q401 2SD762 REGULATOR
D401 MA1130
D402, 403 SVDSR1K2
T401
240V
220V
120V
110V
SWV5-2
WHT
BLU
RED
BLK
DIAL POINTER INDICATOR

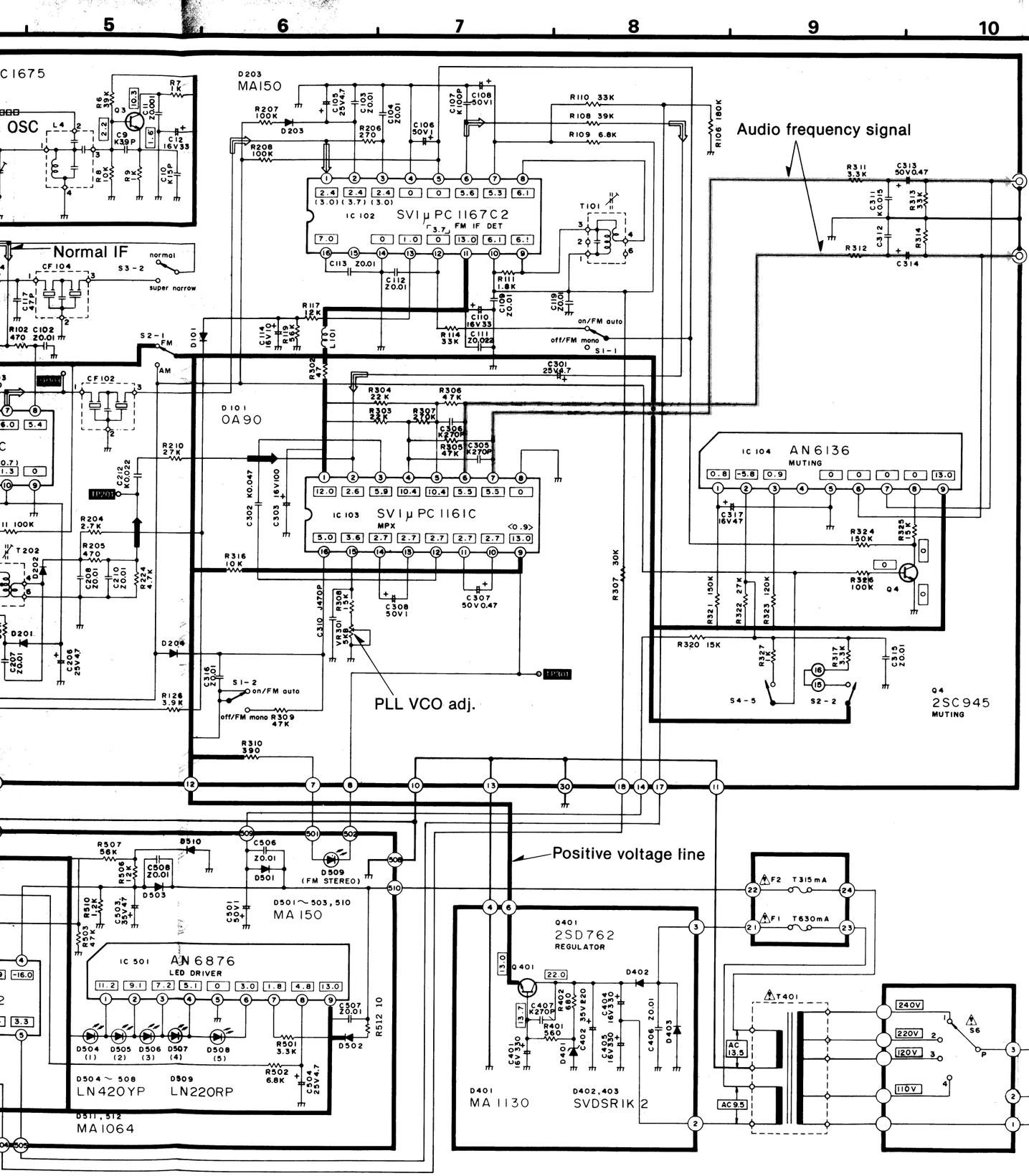

■ SCHEMATIC DIAGRAM

(This schematic diagram may be modified at any time with the development of new technology.)

Notes:

1. **S1-1, 1-2** : FM muting/FM mode selector switch in "**on/FM auto**" position.
   on/FM auto ⟷ off/FM mono
2. **S2-1, 2-2** : Band selector switch in "**FM**" position.
   FM ⟷ AM
3. **S3-1, 3-2** : FM IF-band selector switch in "**normal**" position.
   normal ⟷ super narrow
4. **S4-1, 4-2, 4-4, 4-6 ~ 4-8** : AM band selector switch in "**MW**" position.
   MW ⟷ LW (S4-5 is muting switch.)
5. **S5-1 ~ 5-4** : LW antenna selector switch in "**INT**" position.
   INT ⟷ EXT
6. **S6** : Voltage selector switch in "**240V**" position.
   ④ 110V ⟷ ③ 120V ⟷ ② 220V ⟷ ① 240V
7. **S8** : Power switch in "**on**" position.
8. Indicated voltage values are the standard values for the unit measured by the DC electronic circuit tester (high-impedance) with the chassis taken as standard. Therefore, there may exist some errors in the voltage values, depending on the internal impedance of the DC circuit tester.
   * Figures in [ ] stand for DC voltage in FM/AM signal reception mode.
   * Figures in ⟨ ⟩ stand for DC voltage in FM stereo signal reception mode.
   * Figures in ⌈ ⌋ stand for DC voltage in FM (no signal) muting to on mode.
   * Figures in ( ) stand for DC voltage with the band selectors circuit set at AM.
9. Signal lines
   ⇨ FM signal
   Audio frequency signal ➡/⇢ AM signal
   ▬ Positive voltage lines
10. Important safety notice:
    Components identified by ⚠ mark have special characteristics important for safety. When replacing any of these components, use only manufacturer's specified parts.

Shorting Switch

This unit uses a shorting switch. As illustated below, the circuit is shorted to the next circuit without being opened.
In the circuit diagram, the shaded area represents the common terminal.

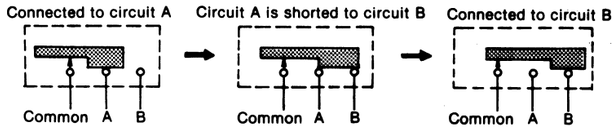

An example of circuit diagram

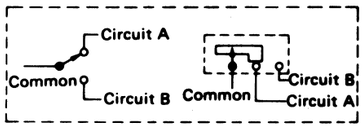

Continued from page 10

Ref. No.		Part No.	Part Name & Description
CAPACITORS			
C1		ECCD1H150K	Ceramic, 50V, 15pF, ± 10%
C2		ECCD1H070D	Ceramic, 50V, 7pF, ± 0.5pF
C3		ECKD1H102ZF	Ceramic, 50V, 0.001μF, +80% −20%
C4		ECCD1H030C	Ceramic, 50V, 3pF, ±0.25pF
C5		ECCD1H150K	Ceramic, 50V, 15pF, ± 10%
C6		ECCD1H060C	Ceramic, 50V, 6pF, ±0.25pF
C7		ECCD1H181K	Ceramic, 50V, 180pF, ± 10%
C8		ECKD1H103ZF	Ceramic, 50V, 0.01μF, +80% −20%
C9		ECCD1H390KC	Ceramic, 50V, 39pF, ± 10%
C10		ECCD1H150KC	Ceramic, 50V, 15pF, ± 10%
C11		ECKD1H102ZF	Ceramic, 50V, 0.001μF, +80% −20%
C12		**ECEA1CS330**	Electrolytic, 16V, 33μF
C101, 102		ECKD1H103ZF	Ceramic, 50V, 0.01μF, +80% −20%
C103, 104		ECKD1H103ZF	Ceramic, 50V, 0.01μF, +80% −20%
C105		**ECEA25Z4R7**	Electrolytic, 25V, 4.7μF
C106		**ECEA50Z1**	Electrolytic, 50V, 1μF
C107		ECCD1H101K	Ceramic, 50V, 100pF, ± 10%
C108		**ECEA50Z1**	Electrolytic, 50V, 1μF
C109		ECKD1H103ZF	Ceramic, 50V, 0.01μF, +80% −20%
C110		**ECEA1CS330**	Electrolytic, 16V, 33μF
C111		ECKD1H223ZF	Ceramic, 50V, 0.022μF, +80% −20%
C112, 113		ECKD1H103ZF	Ceramic, 50V, 0.01μF, +80% −20%
C114		**ECEA1HS100**	Electrolytic, 50V, 10μF
C115		ECCD1H030C	Ceramic, 50V, 3pF, ±0.25pF
C116		ECKD1H103ZF	Ceramic, 50V, 0.01μF, +80% −20%
C117		ECCD1H470K	Ceramic, 50V, 47pF, ± 10%
C119		ECKD1H103ZF	Ceramic, 50V, 0.01μF, +80% −20%
C202		ECCD1H150KC	Ceramic, 50V, 15pF, ± 10%
C203		ECQP1361JZ	Polypropylene, 100V, 360pF, ± 5%
C204		ECKD1H103ZF	Ceramic, 50V, 0.01μF, +80% −20%
C205		**ECEA1HS100**	Electrolytic, 50V, 10μF
C206		**ECEA25Z4R7**	Electrolytic, 25V, 4.7μF
C207, 208		ECKD1H103ZF	Ceramic, 50V, 0.01μF, +80% −20%

Ref. No.		Part No.	Part Name & Description
C210		ECKD1H103ZF	Ceramic, 50V, 0.01μF, +80% −20%
C212		ECQM1H223KZ	Polyester, 50V, 0.022μF, ± 10%
C213		ECKD1H103ZF	Ceramic, 50V, 0.01μF, +80% −20%
C214		**ECEA1HS100**	Electrolytic, 50V, 10μF
C215		**ECEA50Z1**	Electrolytic, 50V, 1μF
C216		ECKD1H103ZF	Ceramic, 50V, 0.01μF, +80% −20%
C223		ECKD1H103MD	Ceramic, 50V, 0.01μF, ± 20%
C224		ECCD1H220K	Ceramic, 50V, 22pF, ± 10%
C250		ECCD1H070D	Ceramic, 50V, 7pF, ± 0.5pF
C251		ECCD1H030C	Ceramic, 50V, 3pF, ±0.25pF
C253		ECQS1181JZ	Styrol, 125V, 180pF, ± 5%
C254		ECCD1H680KC	Ceramic, 50V, 68pF, ± 10%
C301		**ECEA25Z4R7**	Electrolytic, 25V, 4.7μF
C302		ECQM1H473KZ	Polyester, 50V, 0.047μF, ± 10%
C303		**ECEA1ES101**	Electrolytic, 25V, 100μF
C305, 306		ECKD1H271KB	Ceramic, 50V, 270pF, ± 10%
C307		**ECEA50ZR47**	Electrolytic, 50V, 0.47μF
C308		**ECEA50Z1**	Electrolytic, 50V, 1μF
C310		ECQP1471JZ	Polypropylene, 100V, 470pF, ± 5%
C311, 312		ECQM1H153KZ	Polyester, 50V, 0.015μF, ± 10%
C313, 314		**ECEA50ZR47**	Electrolytic, 50V, 0.47μF
C315, 316		ECKD1H103ZF	Ceramic, 50V, 0.01μF, +80% −20%
C317		**ECEA1ES470**	Electrolytic, 25V, 47μF
C401		**ECEA1CS331**	Electrolytic, 16V, 330μF
C402		**ECEA1VS221**	Electrolytic, 35V, 220μF
C404, 405		**ECEA1CS331**	Electrolytic, 16V, 330μF
C406		ECKD1H103ZF	Ceramic, 50V, 0.01μF, +80% −20%
C407		ECKD1H271KB	Ceramic, 50V, 270pF, ± 10%
C408		ECKDKC103PF	Ceramic, 400VAC, 0.01μF, +100% −0%
C501	⚠	**ECEA50Z1**	Electrolytic, 50V, 1μF
C502		**ECEA1ES101**	Electrolytic, 25V, 100μF
C503		**ECEA1HS470**	Electrolytic, 50V, 47μF
C504		**ECEA25Z4R7**	Electrolytic, 25V, 4.7μF
C505		**ECEA50ZR47**	Electrolytic, 50V, 0.47μF
C506, 507		ECKD1H103ZF	Ceramic, 50V, 0.01μF, +80% −20%
C508		ECKD1H103ZF	Ceramic, 50V, 0.01μF, +80% −20%

■ REPLACEMENT PARTS LIST ..... Cabinet & Chassis Parts

Notes:
1. Part numbers are indicated on most mechanical parts. Please use this part number for parts orders.
2. Important safety notice: Components identified by ⚠ mark have special characteristics important for safety. When replacing any of these components, use only manufacturer's specified parts.
3. Bracketed indications in Ref. No. columns specify the area. Parts without these indications can be used for all areas.

Areas
- * [EK] is available in United Kingdom.
- * [EF] is available in France.
- * [EB] is available in Belgium.

Ref. No.		Part No.	Part Name & Description
CABINET and CHASSIS PARTS			
1		SGWTS2LE	Front Panel Ass'y
2		SBN1043	Knob, Tuning
3		SHP671–1	Spacer, Knob
4		SBC337	Button, Power Source
5		SDZ051–2	Cord, Dial 180 cm
6		SWV5–2	Pointer, Dial
7		SHP15–2	Spacer, Pointer
8		SBC409	Button, Push Switch
9		SGU233	Transparent Cover
10		SUFTS2LE	Front Sub Panel Ass'y
11		SKC790S	Cabinet Cover
12		RJT202B	Terminal
13		SJT347	Terminal, Fuse
14		SDR3	Roller
15		SUR125	Bracket, Roller
16		SUG67	Guide, Pointer
17		SUB73	Coupling Rod
18		SUB71	Coupling Rod
19		SUB69	Coupling Rod
20		SDT8083	Shaft, Tuning Ass'y (W/Flywheel)
21		SUR123	Bracket, Roller
22		SHE73	Spacer, P C B
23		SJF3247–1N	Terminal, Output
24		SGP2630–2E	Rear Panel (Made in Japan)
24 [EF]only	JPN	SGP2630–2E	Rear Panel (Made in Japan)
24 [EF]only	MLK	SGP2630–2F	Rear Panel (Made in England)
25		SHR127	Bushing, AC Cord
25 [EK] only		SHR129	Bushing, AC Cord
26	⚠	**SJA88**	AC Cord
26 [EK] only	⚠	**QFC1205M**	AC Cord
27		SHR401–1	Lock Pin, P.C.B
28		SJF4419–4	Terminal, Antenna

Ref. No.		Part No.	Part Name & Description
29		SHG711	Spacer
30		SDD47–1	Drum, Dial
31		SDSA4121	Spring, Dial
32		SKU9111	Bottom Board
33		SKL249	Foot
34		SHR9527–1	Spacer
SCREWS, WASHERS and NUT			
N1		**XTB3+8BFZ**	Screw, Tapping, ⊕ 3 x 8
N2		**XNS11**	Nut, ϕ11
N3		**XWD11B**	Washer, External Toothed Lock ϕ11
N4		**XSN3+6S**	Screw, ⊕ 3 x 6
N5		**XWA3B**	Washer, Spring ϕ3
N6		**XTB4+8BFN**	Screw, Tapping ⊕ 4 x 8
N7		**XTN3+8B**	Screw, Tapping ⊕ 3 x 8
N8		**XWC3B**	Washer, External Toothed Lock ϕ3
N9		**XTB3+8BFZ**	Screw, Tapping ⊕ 3 x 8
N10		SHD3X21F–1	Screw
N11		**XTS3+8B**	Screw, Tapping ⊕ 3 x 8
N12		**XTN3+10B**	Screw, Tapping ⊕ 3 x 10
N13		**XWG3**	Washer, Plain, ϕ3
N14		**XWC3B**	Washer, External Toothed Lock ϕ3
N15		**XTB3+8BFN**	Screw, Tapping ⊕ 3 x 8
N16		**XTB3+10BFZ**	Screw, Tapping ⊕ 3 x 10
N17		**XTN3+8B**	Screw, Tapping ⊕ 3 x 8
N18		**XWG3**	Washer, Plain ϕ3
N19		**XTN3+10BFZ**	Screw, Tapping ⊕ 3 x 10
N20		**XWG3FZ**	Washer, Plain ϕ3
N21		**XTN3+12B**	Screw, Tapping ⊕ 3 x 12
N22		SHD3X27	Screw
ACCESSORIES			
A1		SSA267	Cord, FM Indoor Antenna
A2		SJP2129–5	Cord, Connection
A3		SQF10791	Instruction Book, Printed Matter

■ EXPLODED VIEW

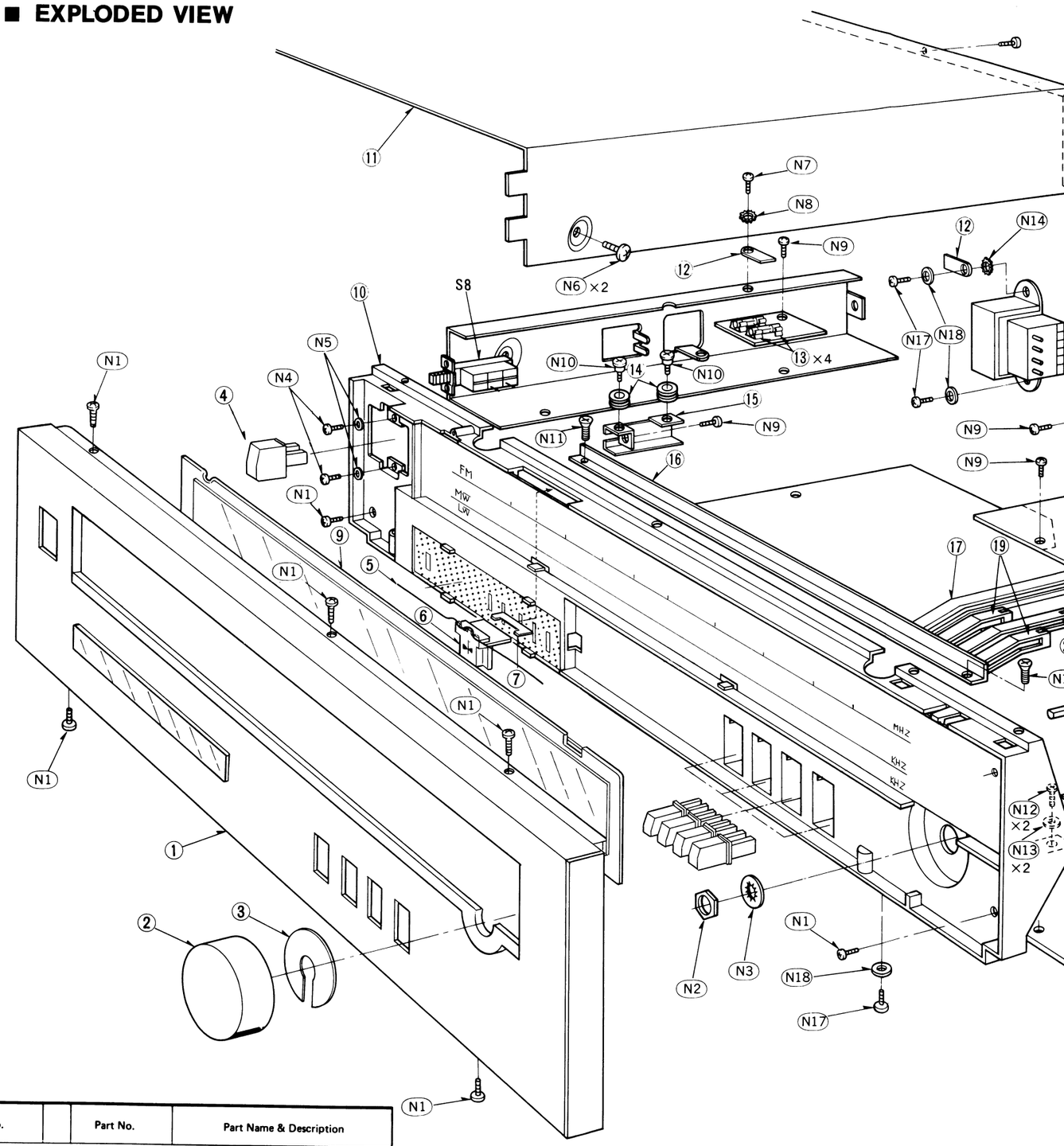

Ref. No.		Part No.	Part Name & Description
PACKING PARTS			
P1		SPP649	Polyethylene Bag
P2		SPS3073–2	Pad, Left Side
P3		SPS3075–2	Pad, Right Side
P4		SPG3095	Carton Box
P4 [EF]only	JPN	SPG3097	Carton Box (Made in Japan)
P4 [EF]only	MLK	SPG2991	Carton Box (Made in England)

■ EXPLODED VIEW

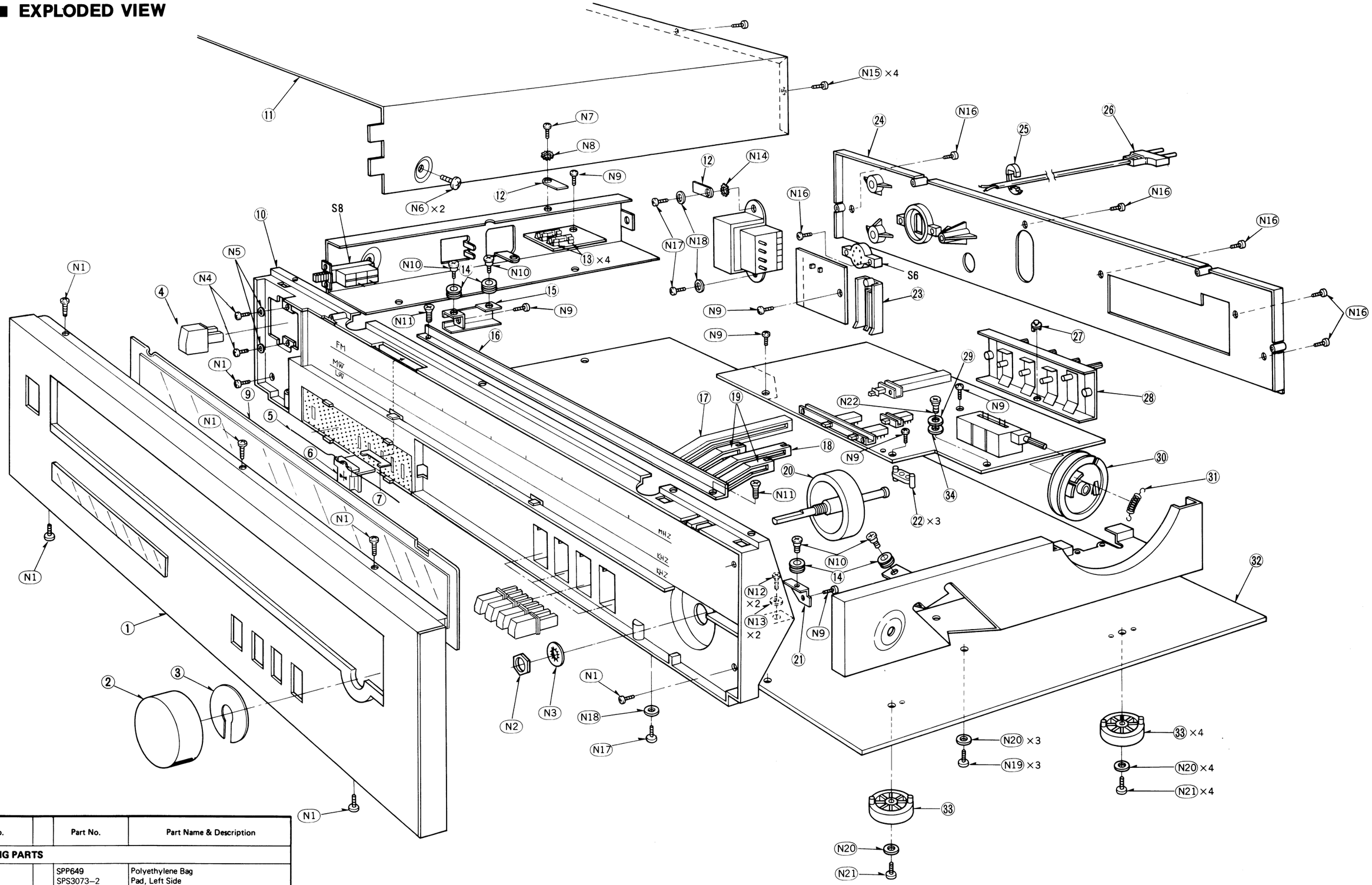

Ref. No.		Part No.	Part Name & Description
PACKING PARTS			
P1		SPP649	Polyethylene Bag
P2		SPS3073–2	Pad, Left Side
P3		SPS3075–2	Pad, Right Side
P4		SPG3095	Carton Box
P4 [EF]only	JPN	SPG3097	Carton Box (Made in Japan)
P4 [EF]only	MLK	SPG2991	Carton Box (Made in England)

Printed in Japan
81053100 Ⓗ SH/TN